# **Moda** 50

Item number: MD4131
Material: Vitreous china
Color/Finish: White/ unfinished back wall
Installation: Wall-mount, or above-counter
Overall Dimensions: 19.7" L x 17.3" W x 7.1" H
Interior Dimensions (basin area): 17.7" L x 11.7" W x 5" H
Foot Print: 16.5" L x 14.5" W
Drain hole: 1-3/4" Interior Diameter
Faucet hole: 1-3/8" Diameter
Approx. weight: 30 lbs
Features: With overflow and one predrilled faucet hole, and two prepared to drill faucet holes
Included components: Wall-mounting fixing bolts kit
Recommended accessories (not included): Oversize European drain, e.g. Delta push pop-up Drain Ref. 72173
Options (not included and sold separately):

- 8" L x 6.6" W x 28" H vitreous china Full Pedestal i.e. Item # MD4910
- 8.9" L x 11.8" W x 12.8" H vitreous china Semi Pedestal (shroud) i.e. Item # GL4970

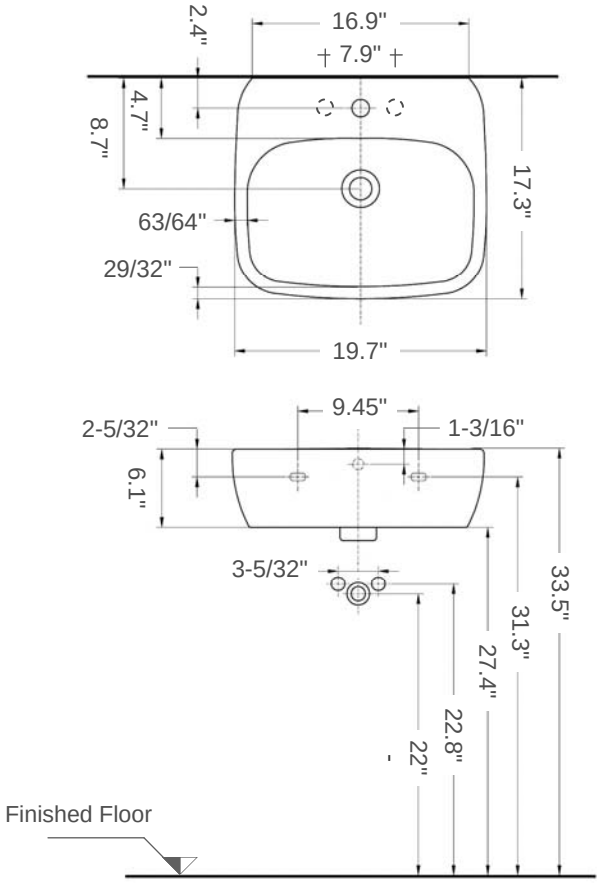


All dimensions are nominal

*Faucet and drain fittings not included. Shown only for photographic purposes*

BISSONNET

Tel. (610) 454-1295 · Fax (610) 454-9385 · info@bissonnet.net · www.bissonnet.net